CP Automation
Keeping industry in motion

HPV1000-App_Note_04

Safe-Off Feature

Guide to set up Safe-Off feature, to reduce required number of motor contactors to one.

This guide is written to assist with the implementation of the HPV1000 “Safe Disable” feature. The intention of this feature is to safely reduce the number of required number of motor contactors to one, whilst still maintaining two forms of electrical isolation as per EN81.
This is achieved by the status of Inputs H1 and H2 enabling or shutting off the IGBT gate drivers independently of the drive software.

Overview of the Safe Off feature

To summarize the feature, the Safe-Off function is yet another way to positively disable the drive so it cannot cause a motor runaway.

- The circuit must be designed so that the inputs H1 and H2 are opened and the drive output shuts off when the safety chain is interrupted.
- A drive digital output must be programmed as Safe Disable feedback. This feedback signal must be implemented in the contactor supervision circuit of the controller that prevents a restart in case of a fault in the Safe Disable circuit or the motor contactor.
- All contactors and wiring must be selected and installed in compliance with EN81-1:1998.
- The safe disable inputs H1 and H2 must be used to enable/disable the drive. The input logic must be set to Source Mode.

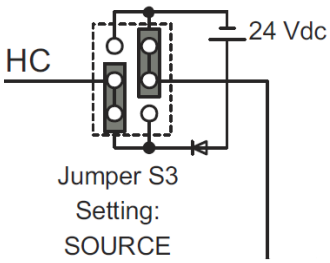

Output
One of the drive’s logic outputs in the C3 menu must be set to “SAFE DISABLE STAT”. The car controller should monitor the state of this output, much in the same way that motor contactors would be monitored.
This output will be HIGH when the drive’s internal Safe Off circuitry is active (IGBTs are disabled, and torque CANNOT be produced in the motor). The output will be LOW when the drive’s internal Safe Off is inactive (IGBTs are enabled, and torque CAN be produced in the motor).

Parameter Settings

The parameters for the “Safe Off” function should be configured as follows:

Parameter Name	Setting	Function
Logic/Relay Output* (C3)	SAFE DISABLE STAT	Provides feedback to the car controller of the status of the Safe Off Input, and therefore the status of the IGBTs (Enabled or Disabled). Used to determine if the drive has been correctly set for the “Safe Off” function and provide similar feedback to that of a contactor auxiliary. Can be configured to any free output. This Output will be HIGH when the drive’s IGBTs are disabled by the Safe Off circuitry, and LOW when the drive’s IGBT are enabled by the Safe Off circuitry. The status of this output can be monitored in the D1 menu under Logic Outputs as a 1 or 0 as with any other output.

* Any free Logic Output can be used, however Logic INPUT 9 is the ONLY input which can be used as the “Safe Off” input.

Figure 1. *Drive parameter table*

Drive Connections

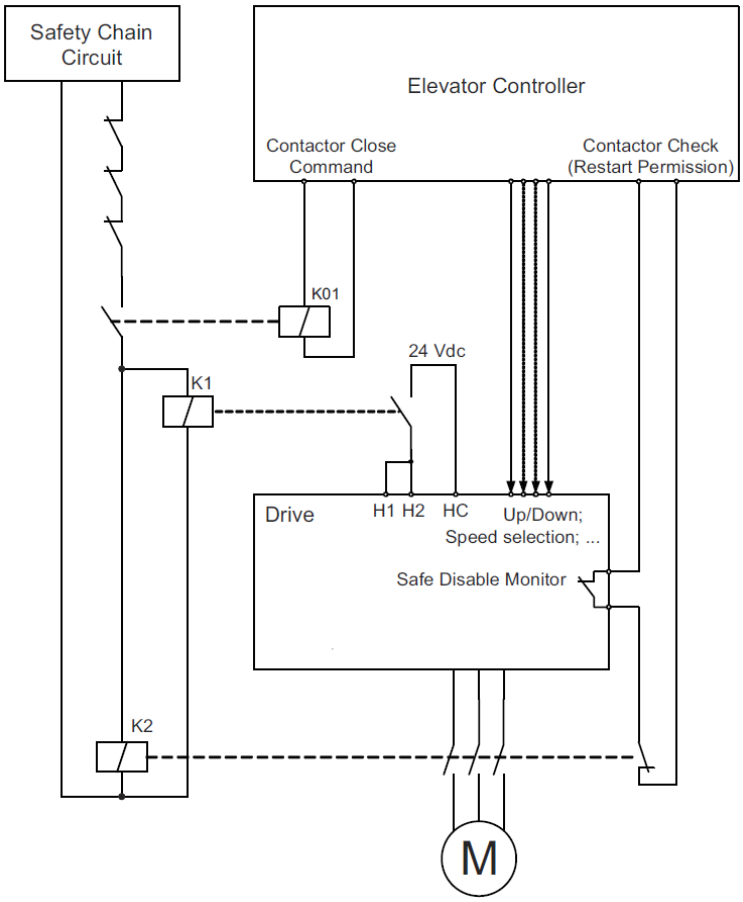

Figure 2. *Drive hardware connection and switch setting*

I/O Status table

Figure 3. *Drive inputs and outputs, as well as the possible fault declarations.*

Additional Fault codes relating to “Safe Off” feature

Name	Description	Possible Causes & Corrective Action
Hbb (alarm)	**Safe Disable Circuit Fault Signal (H1–HC, H2-HC) Open** Both Safe Disable Input channels are open.	**Both Safe Disable Inputs are Open – Sequencing issue** ⇩ Check signal status at the input terminals H1 and H2 ⇩ Check the Sink/Source selection for the digital inputs **Hardware issue** ⇩ Hardware for both input terminals is damaged
HbbF (alarm)	**Safe Disable Circuit Fault Signal (H1–HC OR H2-HC) Open** One Safe Disable Input channel is open.	**Both Safe Disable Inputs are Open – Sequencing issue** ⇩ Check signal status at the input terminals H1 and H2 **Hardware issue** ⇩ Hardware for one input terminal is damaged

Figure 4. *Drive Safe Off fault declarations.*